IMAGINE

BATHROOM TAPS - bath

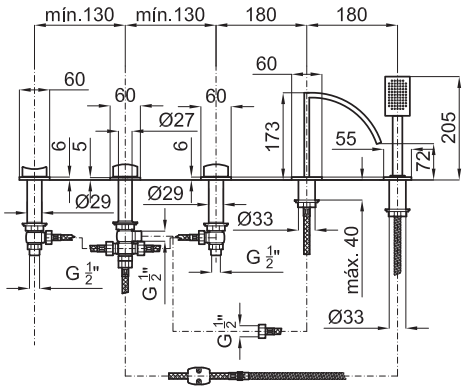

100038840 - N169233101 / chrome

other finishes available

100081808 - N169760028 / gold

5 hole deckmounted bath set 1/2". Consisting of: 2 handles, bath spout, diverter and hand shower with flexi shower 150 cm. Bath spout without aerator. Flow rate 12,03 l/min. at 3 bar. The flexi shower hose provided with any finish will be always in chrome colour.

FLOW RATE CURVES

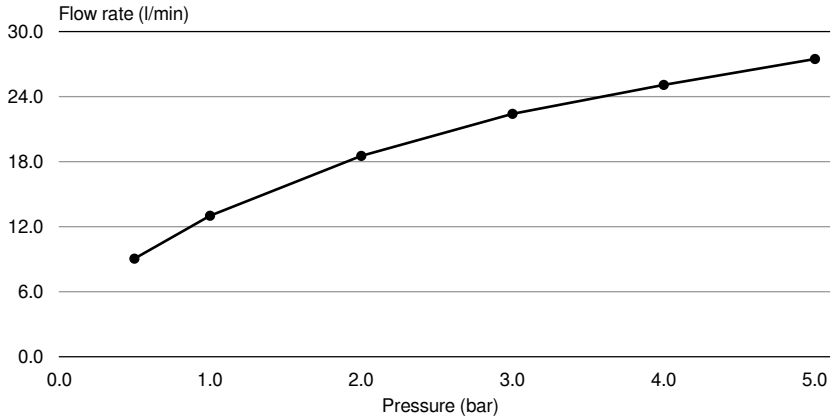

Pressure (bar)	0.5	1.0	2.0	3.0	4.0	5.0
Flow rate (l/min)	9.1	13.0	18.5	22.4	25.1	27.5

Legal disclaimer: All details provided by the NOKEN´s Product has an information purpose without any contractual value. In order to obtain further information about the materials and their installation please visit our showrooms. NOKEN reserves the right to modify or delete any information on this site. The images and colours shown in this site may differ from the real ones.

© 2018 noken | Edition: 9/11/2018